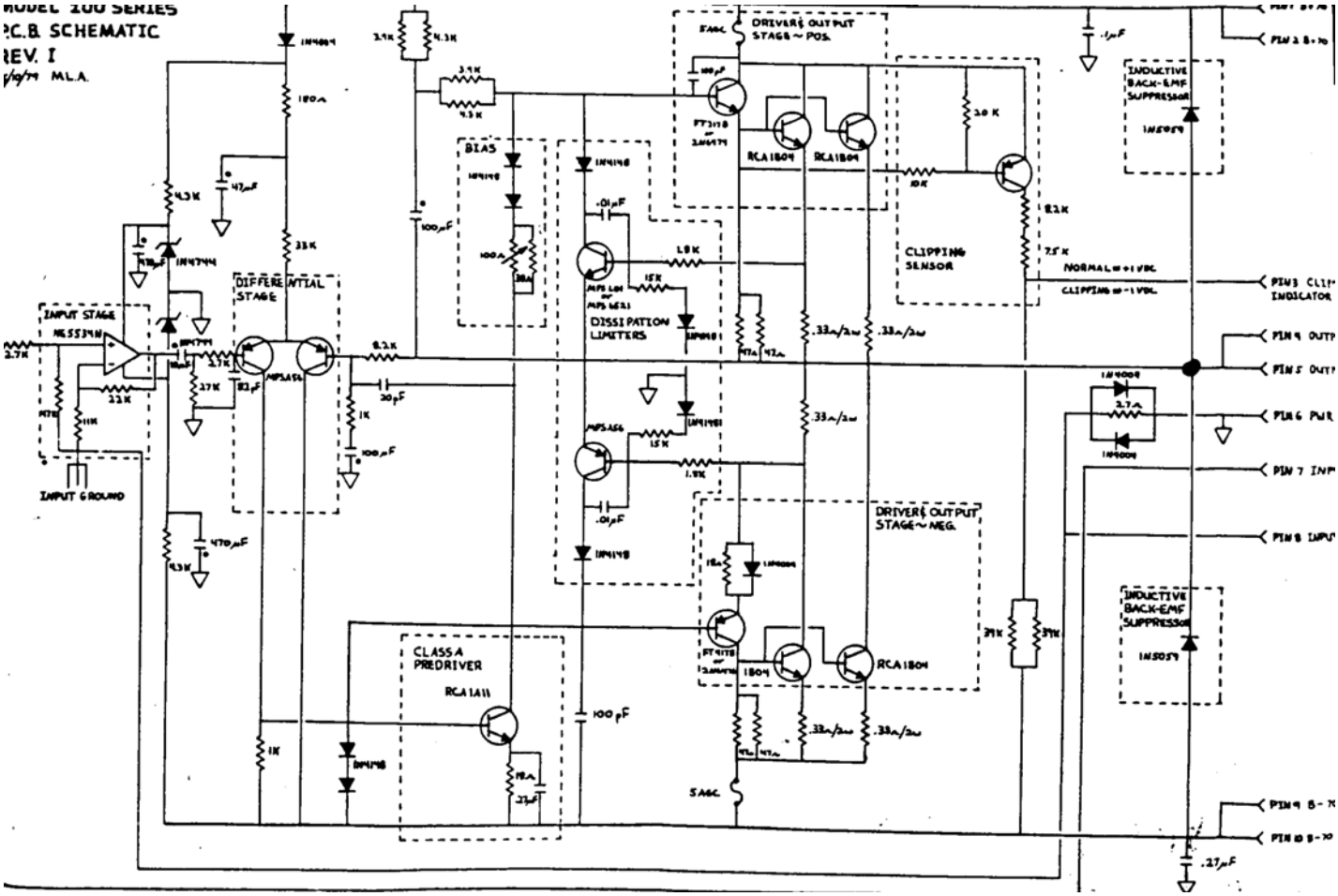
P.C.B. SCHEMATIC
REV. I
INPUT STAGE
INPUT GROUND
DIFFERENTIAL STAGE
BIAS
DISSIPATION LIMITERS
DRIVER & OUTPUT STAGE ~ POS.
DRIVER & OUTPUT STAGE ~ NEG.
CLIPPING SENSOR
NORMAL = +1 VDC
CLIPPING = -1 VDC
INDUCTIVE BACK-EMF SUPPRESSOR
CLASS A PREDRIVER
RCA1804
RCA1811
PIN 3 CLIP INDICATOR
PIN 4 OUTP
PIN 5 OUTP
PIN 6 PWR
PIN 7 INP
PIN 8 INPUT
PIN 9 B-
PIN 10 B-